3D Tubular Cable Lugs

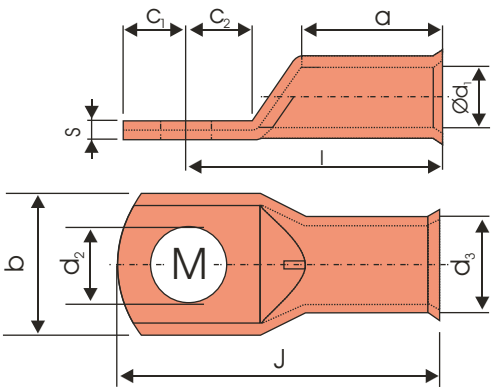

Economy-easy Entr y Barrel, With Inspection Vent.
for Copper Conductor
Material : E Copper,
Surface : Tin Plated.

Conductor mm²	Bolt Ø	3D CAT NO.	Dimensions in mm										Tools	pcs
			a	b	c_1	c_2	d_1	d_2	d_3	l	J	S		
35	M 5	3D-2135E	15	16	8	8	8.6	5.2	10.8	28	36	2.5	3D-7	50
	M 6	3D-2292E	15	16	8	8	8.6	6.5	10.8	28	36	2.5		
	M 8	3D-2293E	15	16	8	8	8.6	8.5	10.8	28	36	2.5		
	M 10	3D-2294E	15	16	9	11	8.6	10.5	10.8	31	40	2.5		
	M 12	3D-2295E	15	18	11	12	8.6	13	10.8	33	44	1.9		
	M 14	3D-2296E	15	20	12	14	8.6	15	10.8	35	47	1.7		
50	M 6	3D-2297E	16	17	10	10	9.6	6.5	11.8	32	42	2.2	3D-7	50
	M 8	3D-2298E	16	17	10	10	9.6	8.5	11.8	32	42	2.2		
	M 10	3D-2299E	16	17	10	10	9.6	10.5	11.8	32	42	2.2		
	M 12	3D-2300E	16	18	10	10	9.6	13	11.8	32	42	2.0		
	M 14	3D-2301E	16	20	12	12	9.6	15	11.8	34	46	1.8		
	M 16	3D-2302E	16	24	14	14	9.6	17	11.8	38	52	1.5		
70	M 6	3D-2136E	18	22	11	11	12	6.5	15	36	47	2.9	3D-7	25
	M 8	3D-2303E	18	22	11	11	12	8.5	15	36	47	2.9		
	M 10	3D-2304E	18	22	11	11	12	10.5	15	36	47	2.9		
	M 12	3D-2350E	18	22	11	11	12	13	15	36	47	2.9		
	M 14	3D-2306E	18	22	14	14	12	15	15	39	53	2.9		
	M 16	3D-2307E	18	24	14	14	12	17	15	40	54	2.7		
	M 20	3D-2137E	18	30	18	18	12	21	15	46	64	2.1		
95	M 8	3D-2308E	20	24	12	12	13.5	8.5	16.5	40	52	2.9	3D-7	25
	M 10	3D-2309E	20	24	12	12	13.5	10.5	16.5	40	52	2.9		
	M 12	3D-2310E	20	24	12	12	13.5	13	16.5	40	52	2.9		
	M 14	3D-2311E	20	24	14	14	13.5	15	16.5	42	56	2.9		
	M 16	3D-2312E	20	24	14	14	13.5	17	16.5	42	56	2.9		
	M 20	3D-2313E	20	30	18	18	13.5	21	16.5	48	66	2.4		
120	M 8	3D-2314E	22	27	12	12	15	8.5	19	43	55	4.0	3D-7-39	25
	M 10	3D-2315E	22	27	12	12	15	10.5	19	43	55	4.0		
	M 12	3D-2316E	22	27	12	12	15	13	19	43	55	4.0		
	M 14	3D-2317E	22	27	14	14	15	15	19	45	59	4.0		
	M 16	3D-2318E	22	27	14	14	15	17	19	45	59	4.0		
	M 20	3D-2319E	22	27	18	18	15	21	19	50	68	3.6		